Ebola Virus Disease
Sample Collection Kit and Protocol for sample packaging

Clinical specimen collection

Traveler from outbreak /endemic region or Community Transmission		
Asymptomatic contacts	• Observe for the development of any signs and symptoms for 21 days post exposure • If signs and symptoms developed, collect specimens as per the duration of illness as mentioned below	
Symptomatic	Acute Phase of Infection	Convalescent Phase
	• Blood collected in EDTA (2-3 ml) • Blood collected in SSGT (4-5 ml) • NPS/OPS in in VTM (3ml) • Urine in sterile container (3-5ml) • CSF sample in plain tube (1ml) [if presentation of encephalitis] • Stool specimen in plain tube /Rectal swabs in VTM (3ml)	• Blood collected in SSGT (4-5 ml) • Urine in sterile urine container (3-5ml) • Semen samples in plain tube/Vaginal swabs in VTM

Breast Milk screening to be done as needed in Lactating mother who test positive for EVD

- High risk cases- A repeat sample after 48-72 hours hours to be collected before declaring the case as negative
- Different clinical specimens might be required to rule out other differential diagnosis

Pre-requisites for specimen collection

- Identify patient isolation room
- Identify room for donning PPE
- Identify room for doffing PPE
- Prepare specimen collection kit
- Prepare specimen packaging & Transport kit
- Prepare spill management kit
- Identify an observer with check list for verifying donning & doffing
- Fill the details in CRF

Pre requisites for specimen collection..contd.

- Preferably accompany an assistant during specimen collection
- Label the Tyvek suit with staff designation marking as
- "Doctor" "Nurse" "Lab Technician"
- Identify trained medical staff, who can safely collect the appropriate specimens
- Key factor: "Biosafety precautions"
- Ebola virus is classified as a Risk group 4 agent and the clinical specimens should be collected using universal precautions.

PPE for Health care workers in hospital

Standard Quality of PPE for Ebola – Key Acceptance Criteria

- ❑ EN14126:2003 (Barrier to infective agents) – mandatory for Ebola
- ❑ Type 5-B (airborne solid particulates) & Type 6-B (liquid sprays)
- ❑ Microporous polyethylene laminate non-woven fabric
- ❑ 3-piece hood, 2-way zipper with sealable storm flap
- ❑ Attached boots / anti-skid soles (no exposed skin)
- ❑ Elasticated hood, waist, ankles & wrists + finger loops
- ❑ **Additional required standards:**
  - ✓ EN 530 (abrasion), EN ISO 7854 (flex cracking)
  - ✓ EN ISO 9073-4 (tear resistance), EN 863 (puncture)
  - ✓ EN ISO 13938-1 (burst), EN ISO 6530 (liquid chemical penetration)
  - ✓ EN 1149-5 (electrostatic dissipation)

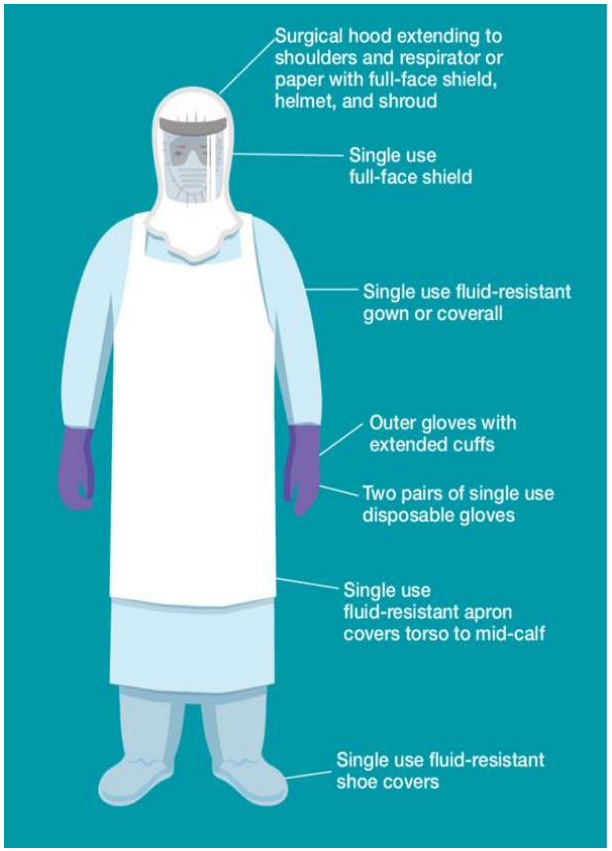

Assemble all Sample Collection Material as Kit before entering the Isolation Ward

Specimen collection kit per person [Plastic leak-proof primary container]

- Serum separator tube(SSGT)- Yellow tube/ Red top plain
- EDTA Tube [purple top]
- Plain tubes for Urine and Stool
- Sterile Polypropylene Swabs
- Viral transport medium (VTM)
- Waterproof marker/Labels
- Parafilm/ micropore [if parafilm not available]
- Scissor [Blunt-nosed]
- Prelabelled tubes [waterproof, printed preferably]
- Tourniquet
- Vacutainer needles

- Alcohol/Spirit swabs and Dry swabs
- Surface disinfectant materials for primary container
- Biohazard Bags for packing the primary container

Disinfectant and waste management requirements for sample collection

- Disinfectant- one hand sprayer (0.05% chlorine solution) or Alcohol based solution
- Leak-proof and puncture-resistant sharps container having 0.5% sodium hypochlorite or 0.5% Quaternary Ammonium Compound [contact time 20-30 min]
- Leak-proof/Sharp containers for infectious sharps disposal (autoclavable)

IPC practices to be followed for sample collection

- For hand hygiene
- Alcohol-based handrub (recommended) OR
- Clean running water, soap and disposable (paper) towel OR Chlorine solution 0.05%

Additional Personal Protective Equipment (PPE)

- Several pairs of disposable gloves
- One pair for sample collection
- Additional pairs as a replacement if they become damaged or contaminated
- Disinfectant- 0.5% sodium hypochlorite or 0.5% Quaternary Ammonium Compound

Specimen transportation to BSL-3 or BSL-4 Facility

- Please adhere to the updated WHO-IATA guidelines for shipping clinical specimens.
- Ensure all samples are packed using the Triple Packaging method.
- Suspected clinical samples must be shipped as Category B [Biological Substances], classified under Class 6.2, to maintain compliance with international biosafety and transportation standards.
- UN3373 is the Proper shipping names (PSN) for Category B – Biological substances
- Packing Instructions 650 (PI 650) should be followed

No Biohazard Label or DGD Form is required

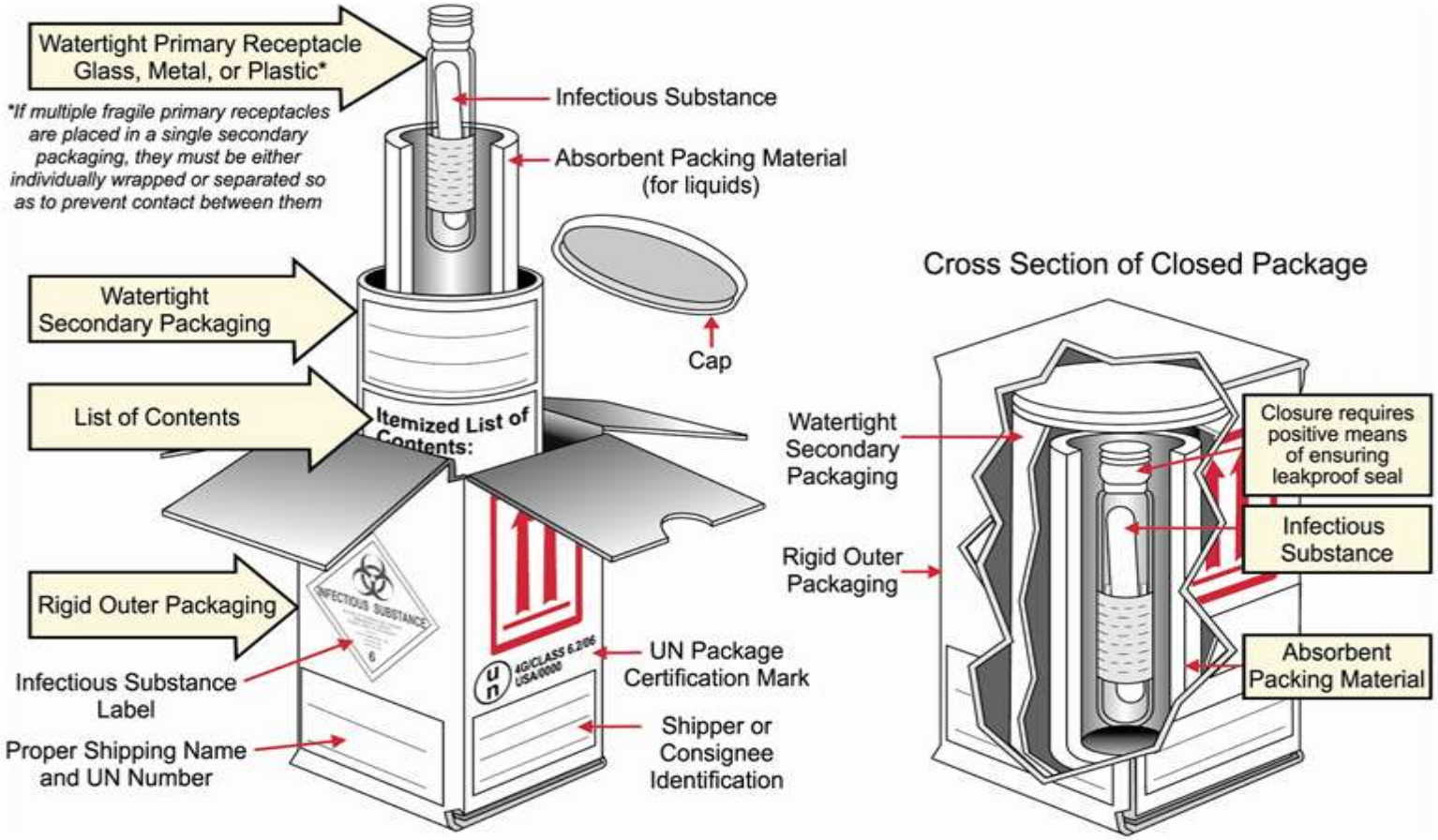

Example of triple packaging system for the packaging and labelling

If any Case is Ebola positive and Follow up samples needs to be sent, then it will go as Category-A shipment

- Infectious substances: (Category A)
  - Affecting humans and animals
  - Affecting animals only

- An infectious substance which is transported in a form that, when exposure to it occurs, is capable of causing permanent disability, life-threatening or fatal disease in healthy humans or animals.

Proper shipping names (PSN)

UN2814 UN2900

SHIPPER's DECLARATION FOR DANGEROUS GOODS (DGD)- FOR CATEGORY A ONLY

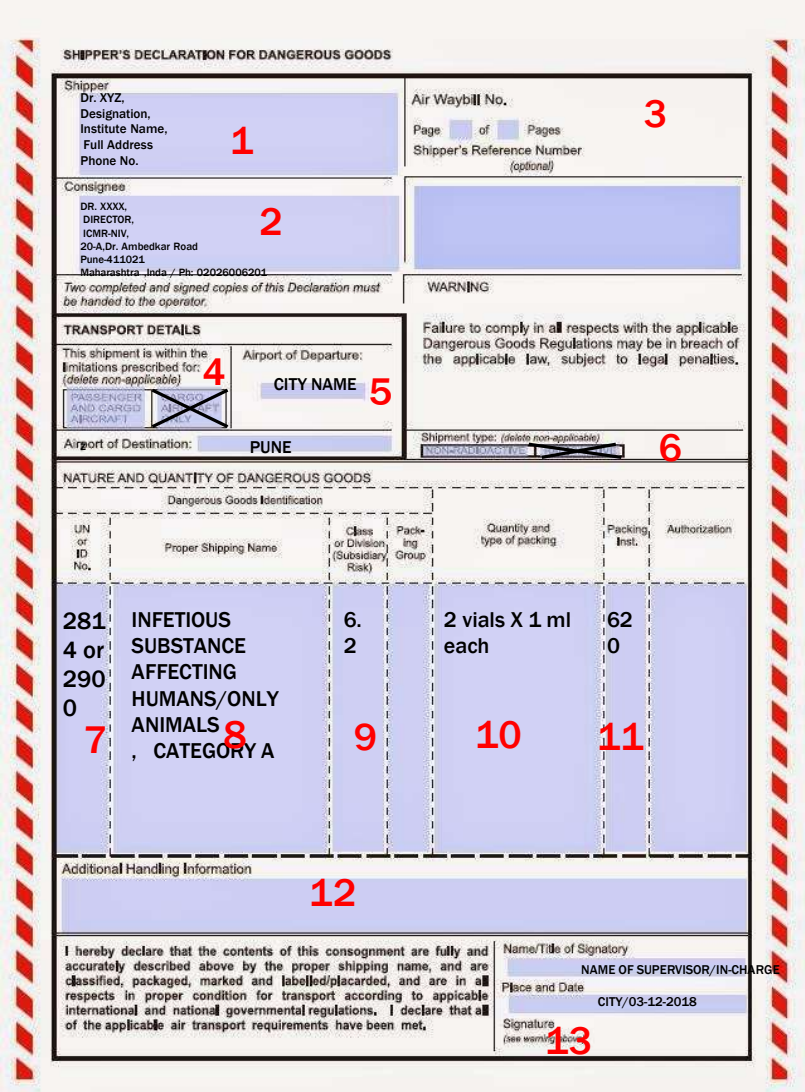

SHIPPER'S DECLARATION FOR DANGEROUS GOODS

Shipper
Dr. XYZ,
Designation,
Institute Name,
Full Address
Phone No.
1

Air Waybill No.
3
Page of Pages
Shipper's Reference Number
(optional)

Consignee
DR. XXXX,
DIRECTOR,
ICMR-NIV,
20-A,Dr. Ambedkar Road
Pune-411021
Maharashtra ,Inda / Ph: 02026006201
2

Two completed and signed copies of this Declaration must be handed to the operator.

WARNING

Failure to comply in all respects with the applicable Dangerous Goods Regulations may be in breach of the applicable law, subject to legal penalties.

TRANSPORT DETAILS

This shipment is within the limitations prescribed for: (delete non-applicable)
4
PASSENGER AND CARGO AIRCRAFT
~~CARGO AIRCRAFT ONLY~~

Airport of Departure:
CITY NAME
5

Airport of Destination: PUNE

Shipment type: (delete non-applicable)
~~RADIOACTIVE~~
6

NATURE AND QUANTITY OF DANGEROUS GOODS

Dangerous Goods Identification				Quantity and type of packing	Packing Inst.	Authorization
UN or ID No.	Proper Shipping Name	Class or Division (Subsidiary Risk)	Packing Group			
2814 or 2900 7	INFETIOUS SUBSTANCE AFFECTING HUMANS/ONLY ANIMALS , CATEGORY A 8	6.2 9		2 vials X 1 ml each 10	620 11	

Additional Handling Information
12

I hereby declare that the contents of this consognment are fully and accurately described above by the proper shipping name, and are classified, packaged, marked and labelled/placarded, and are in all respects in proper condition for transport according to applicable international and national governmental regulations. I declare that all of the applicable air transport requirements have been met.

Name/Title of Signatory
NAME OF SUPERVISOR/IN-CHARGE
Place and Date
CITY/03-12-2018
Signature
(see warning above)
13

1 Shipper's/sender's Full Address /Contact No.

2 Receiver/consignee's Full Address /Contact No.

3 Airway Bill No.[to be filled by transporter agency]

4 Whether to be shipped by Passenger upto 50 ml or 50 g and Cargo aircraft upto 4 L or 4 kg as per max limit

5 City of departure and destination

6 Whether radioactive material

7 UN code 2814 or 2900

8 Biological Substance, Category A Infecting Humans/Animals

9 Class of DG – 6.2

10 Quantity 2 ml ; 4G/Class 6.2/05/GB/2470

11 Packing Instruction 620

12 Additional Info – Emergency Contact

13 Name, sign of Auth person/Date & Place

Difference between Category A & B shipment

Criteria	Category A	Category B
Can cause permanent disability/life threatening to humans or animals	Yes	No
UN number	2814 2900	3373
Packing instruction	620	650
Shipper's Declaration for Dangerous Goods	Yes	No
Certified training required	Yes	No (Awareness Training will do)

All the samples to be routed through IDSP

To,
Dr Rajesh Chandramohanadas
Scientist In-Charge
BSL-3 Laboratory
BRIC-Rajiv Gandhi Centre for Biotechnology (RGCB)- Campus II,
Near Southern Air Command,
Cheruvikkal Village Office Road, Akkulam,
Thiruvananthapuram, Pincode-695011
Email: bsl3@rgcb.res.in

Checklist Before Sending Samples to RGCB

1. Prior electronic intimation regarding sample transport and testing should be sent via email to bsl3@rgcb.res.in by the designated hospital/institute.
2. Samples should be packed using the Triple Packaging System in accordance with the packaging, labelling, and documentation requirements for Biological Substance, Category B (UN3373) [Packing Instruction 650 (PI650)], as outlined in the Guidance on Regulations for the Transport of Infectious Substances.
3. The Case Report Form (CRF) should be completed accurately and placed securely inside a plastic sleeve or zip-lock bag.
4. Details of the total number of packages dispatched should be provided.
5. Courier details, including the tracking ID/consignment number, should be shared.
6. Please ensure that the sender's name and address and the receiver's name and address are clearly and correctly mentioned on the courier package.
7. Kindly notify RGCB by email once the shipment has been dispatched and share the courier tracking details for monitoring and timely receipt of the samples